Chips trays A50 kraft

SKU: 9987061-A



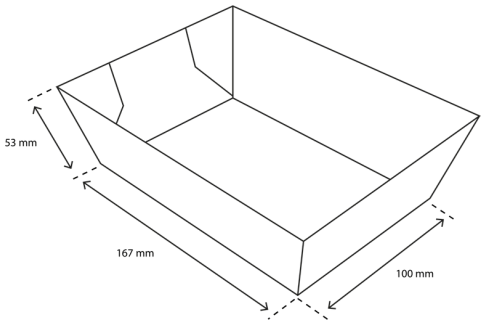

General information

Product type	Chips and snack trays
EAN code	8720053674141
HS code	4819
Recyclable	-
DOCs	-
Pieces per box	400
Size	A50
Color	Kraft
Material	Cardboard
Paper thickness	-
Coating	PE

Dimensions and weight

Length	167 mm
Width	100 mm
Height	53 mm
Diameter	-
Capacity	-
Weight per piece	14.6 gram

Packaging

Length	-
Width	-
Height	430 mm
Weight per colli	6240 gram
Boxes per pallet	36

Also printable

TakeAware
Dublinweg 4, 9744 VB, Groningen
www.takeaware.nl

Contact
info@takeaware.nl
+31 50 747 0003